SFU PCHEM LAB

# FISHER Surface Tensiometer

Model 20
Manual

January 2010

## THE INSTRUMENT

The FISHER Surface Tensiometer, Model 20, is used to determine the apparent surface tension and interfacial tension of liquids. Employing the ring method to achieve speed and accuracy, the instrument is applicable to many educational, biological, medical and industrial determinations in connection with water, petroleum products, detergents, pharmaceutical materials and other substances.

The Model 20 utilizes the principles of operation originally devised by Dr. Pierre Lecomte du Nouy, the noted biochemist, for studies of blood serum and other biological fluids. Essentially a torsion-type balance, it is the kind of instrument currently specified by the American Society for Testing Materials in Methods D-971 (interfacial tension of oil against water) and D-1331 (surface and interfacial tensions of detergents).

In the du Nouy method, a platinum-iridium ring of precisely known dimensions is suspended from a counter-balanced lever arm. The arm is held horizontal by torsion applied to a taut stainless steel wire, to which it is clamped. Increasing the torsion in the wire raises the arm and the ring, which carries with it a film of the liquid in which it is immersed. The force necessary to pull the test ring free from this surface film is measured.

The Surface Tensiometer shows this "apparent" surface or interfacial tension (the latter measured at the interface between two immiscible liquids) on a calibrated dial. The dial readings can be used directly for comparative studies or converted to "true" values by using a correction factor chart.

## UNPACKING

The FISHER Surface Tensiometer is shipped in a single carton. Carefully unpack the contents, and check each item against the packing list below. If any items are damaged, save all packing material and file claim with the carrier; if any items are missing, notify your nearest Fisher Branch.

| Quantity | Item | Number |
|---|---|---|
| 1 | Surface Tensiometer | 14-812 |
| 1 | Platinum-Iridium Ring | 14-812-5 |
| 2 | Torsion Wire Assembly | 12208 |
| 1 | Instruction Manual | 15041 |

## ASSEMBLY

The Surface Tensiometer consists of a torsion wire balance with a dial calibrated in dynes per centimeter, a weighed platinum-iridium ring, and a movable table. The torsion wire balance

and movable table are mounted on the stand within the case. The ring is shipped in a wooden container which is secured to the main pedestal of the stand.

Prior to use, the instrument should be placed on a solid support (table or bench) and leveled. To do this, simply open the door and, using the two knobs near the left edge of the base, adjust the feet until the spirit level indicates that the cabinet is level.

For shipping purposes, the tension has been relieved from the torsion wire. In order to restore the tension, back off the screw which is accessible through the small hole in the upper center portion of the rear of the cabinet. Loosening this screw allows the tension spring (Item 4 of Figure 1) to exert pressure against the bar (Item 2), thus restoring the tension on the wire. The packing material which supports the junction of the torsion wire and level arm should be removed, as should the packing material on the level arm near the index mirror and arrest mechanism (Items 12 and 23 of Figure 1). The Surface Tensiometer is now ready for calibration.

## CALIBRATION

The calibration of the torsion wire and hence of the Surface Tensiometer has been carefully tested at the factory but should be checked before use and adjusted if necessary. The calibration is carried out so that the dial will read directly in dynes per centimeter.

Make sure that the torsion arm arrest mechanism (Item 23) is holding the arm. Hang the platinum-iridium ring on the hook at the left end of the lever. Cut a small strip of paper and fit it onto the ring to act as a platform for a weight which will be used for the calibration. Release the torsion arm, and adjust the knob on the right side of the case until the index (Item 11) and its image are exactly in line with the reference line of the mirror (Item 12). Turn the knob beneath the main dial on the front of the instrument until the vernier reads zero on the outer scale of the dial. Arrest the torsion arm.

Place a known mass for calibration on the paper platform (600 milligrams is quite suitable and simplifies calculations). Release the torsion arm. Turn the knob on the right side of the case in a counterclockwise direction until the index and its image are again exactly in line with the reference line of the mirror. Record the dial reading to the nearest 1/10 scale division (by use of the vernier).

## THE INSTRUMENT

The FISHER Surface Tensiometer, Model 20, is used to determine the apparent surface tension and interfacial tension of liquids. Employing the ring method to achieve speed and accuracy, the instrument is applicable to many educational, biological, medical and industrial determinations in connection with water, petroleum products, detergents, pharmaceutical materials and other substances.

The Model 20 utilizes the principles of operation originally devised by Dr. Pierre Lecomte du Nouy, the noted biochemist, for studies of blood serum and other biological fluids. Essentially a torsion-type balance, it is the kind of instrument currently specified by the American Society for Testing Materials in Methods D-971 (interfacial tension of oil against water) and D-1331 (surface and interfacial tensions of detergents).

In the du Nouy method, a platinum-iridium ring of precisely known dimensions is suspended from a counter-balanced lever arm. The arm is held horizontal by torsion applied to a taut stainless steel wire, to which it is clamped. Increasing the torsion in the wire raises the arm and the ring, which carries with it a film of the liquid in which it is immersed. The force necessary to pull the test ring free from this surface film is measured.

The Surface Tensiometer shows this "apparent" surface or interfacial tension (the latter measured at the interface between two immiscible liquids) on a calibrated dial. The dial readings can be used directly for comparative studies or converted to "true" values by using a correction factor chart.

## UNPACKING

The FISHER Surface Tensiometer is shipped in a single carton. Carefully unpack the contents, and check each item against the packing list below. If any items are damaged, save all packing material and file claim with the carrier; if any items are missing, notify your nearest Fisher Branch.

| Quantity | Item | Number |
|---|---|---|
| 1 | Surface Tensiometer | 14-812 |
| 1 | Platinum-Iridium Ring | 14-812-5 |
| 2 | Torsion Wire Assembly | 12208 |
| 1 | Instruction Manual | 15041 |

## ASSEMBLY

The Surface Tensiometer consists of a torsion wire balance with a dial calibrated in dynes per centimeter, a weighed platinum-iridium ring, and a movable table. The torsion wire balance

and movable table are mounted on the stand within the case. The ring is shipped in a wooden container which is secured to the main pedestal of the stand.

Prior to use, the instrument should be placed on a solid support (table or bench) and leveled. To do this, simply open the door and, using the two knobs near the left edge of the base, adjust the feet until the spirit level indicates that the cabinet is level.

For shipping purposes, the tension has been relieved from the torsion wire. In order to restore the tension, back off the screw which is accessible through the small hole in the upper center portion of the rear of the cabinet. Loosening this screw allows the tension spring (Item 4 of Figure 1) to exert pressure against the bar (Item 2), thus restoring the tension on the wire. The packing material which supports the junction of the torsion wire and level arm should be removed, as should the packing material on the level arm near the index mirror and arrest mechanism (Items 12 and 23 of Figure 1). The Surface Tensiometer is now ready for calibration.

## CALIBRATION

The calibration of the torsion wire and hence of the Surface Tensiometer has been carefully tested at the factory but should be checked before use and adjusted if necessary. The calibration is carried out so that the dial will read directly in dynes per centimeter.

Make sure that the torsion arm arrest mechanism (Item 23) is holding the arm. Hang the platinum-iridium ring on the hook at the left end of the lever. Cut a small strip of paper and fit it onto the ring to act as a platform for a weight which will be used for the calibration. Release the torsion arm, and adjust the knob on the right side of the case until the index (Item 11) and its image are exactly in line with the reference line of the mirror (Item 12). Turn the knob beneath the main dial on the front of the instrument until the vernier reads zero on the outer scale of the dial. Arrest the torsion arm.

Place a known mass for calibration on the paper platform (600 milligrams is quite suitable and simplifies calculations). Release the torsion arm. Turn the knob on the right side of the case in a counterclockwise direction until the index and its image are again exactly in line with the reference line of the mirror. Record the dial reading to the nearest 1/10 scale division (by use of the vernier).

It is now necessary to determine the accuracy of the calibration from the reading obtained. The apparent surface tension, S, is given as follows:

$$S = \frac{Mg}{2L}$$

where:

M = the weight expressed in grams
g = acceleration of gravity expressed in $cm/sec^2$
L = mean circumference of the ring in centimeters
S = dial reading = apparent surface tension in dynes per cm

For example, suppose that a 600 milligram weight was used. The circumference of the ring is 6.00 cm, and the value for g is 980 $cm/sec^2$. Then we find that

$$S = \frac{Mg}{2L} = \frac{0.6 \times 980}{2 \times 6} = 49.00 \text{ dynes/cm}$$

If the dial reading differs from the calculated value, then the effective length of the torsion arm must be adjusted until these two values do agree. This adjustment is accomplished by turning the knurled knob at the left end of the lever arm (Item 10) so as to move the hanger hook. If the recorded dial reading is greater than the calculated value, move the hook to shorten the effective length of the arm. Conversely, if the dial reading is less than the calculated value, move the hook to lengthen the effective length of the arm. Repeat the calibration procedure until the dial reading and calculated value agree. The dial will read directly in dynes per centimeter.

The mean circumference of rings is 6.00 cm in general. Slight deviations may be found, and the circumference of each ring is noted on its container. In the preceding example, 600 milligrams were used to simplify calculations.

The value of g, the acceleration of gravity, varies slightly from place to place on the surface of the earth. For precise work, the use of the exact value of g for the locality is recommended. For certain localities, this value may be listed in various handbooks; or it may be determined experimentally.

## OPERATION

In making a determination of surface tension, careful preparation of the sample and the Surface Tensiometer must precede the actual manipulation of the instrument.

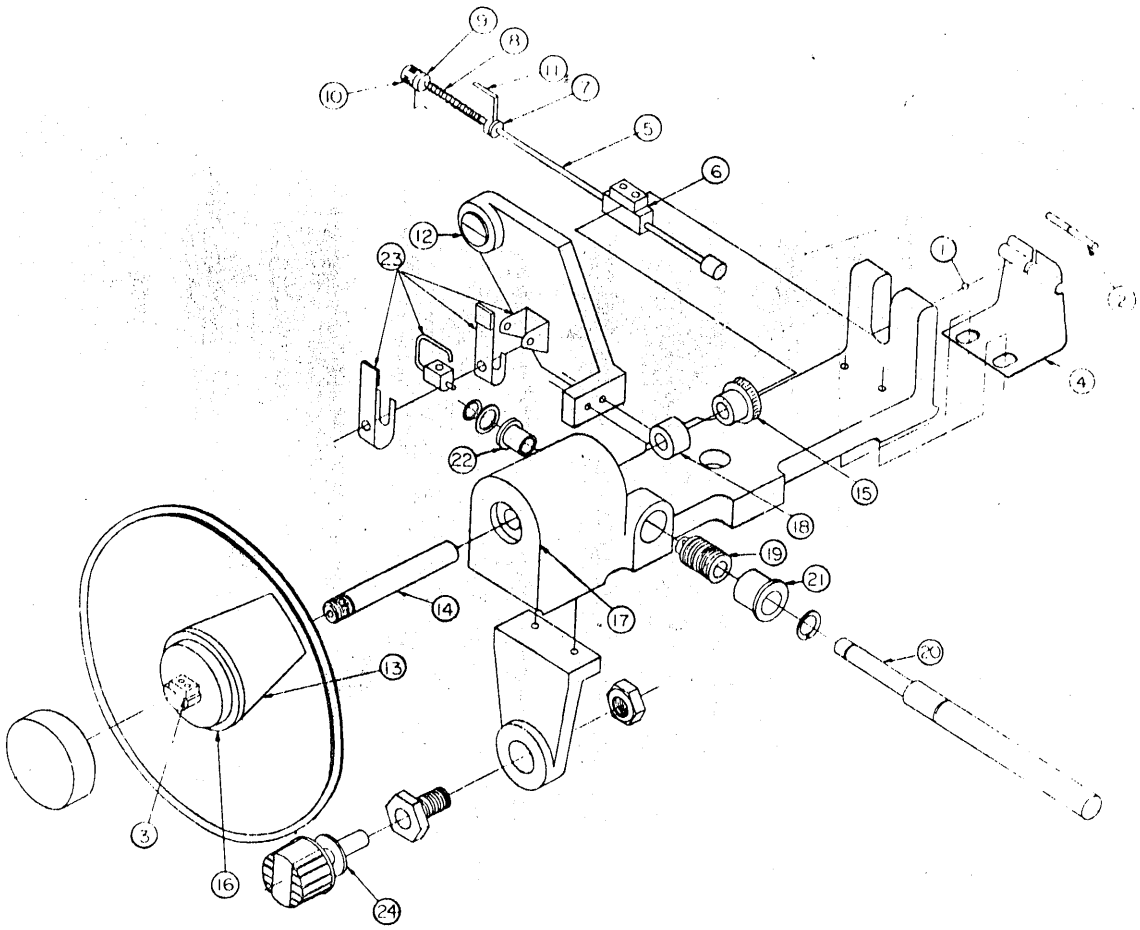


FIGURE 1 - MECHANICAL SYSTEM

The sample should be placed in a glass beaker or cylindrical vessel with a diameter of at least 45 millimeters. For testing oil samples according to ASTM Method D-971, the glassware should be cleaned according to a definite procedure. Any residual oil from the previous sample is removed with petroleum naphtha or benzene followed by several washes with methyl ethyl ketone and water, then the glassware is immersed in a hot cleaning solution of chromic acid. The glassware also should be rinsed thoroughly with tap water, then with distilled water. It should be drained in an inverted position over a clean cloth, unless it is to be used immediately.

The platinum-iridium ring should be cleaned by rinsing it in petroleum naphtha or benzene, then by rinsing in methyl ethyl ketone. The ring should then be heated in the oxidizing portion of a gas flame.

The preceding instructions apply particulary to preparation for determinations on oil samples. A comparable degree of cleanliness should be sought for other samples.

Since surface tension is dependent upon temperature, consideration must be given to this factor. For theoretical work, temperatures must be specified; however, 25°C is the temperature most commonly used. For control work, the operator should use the same temperature for each type of measurement.

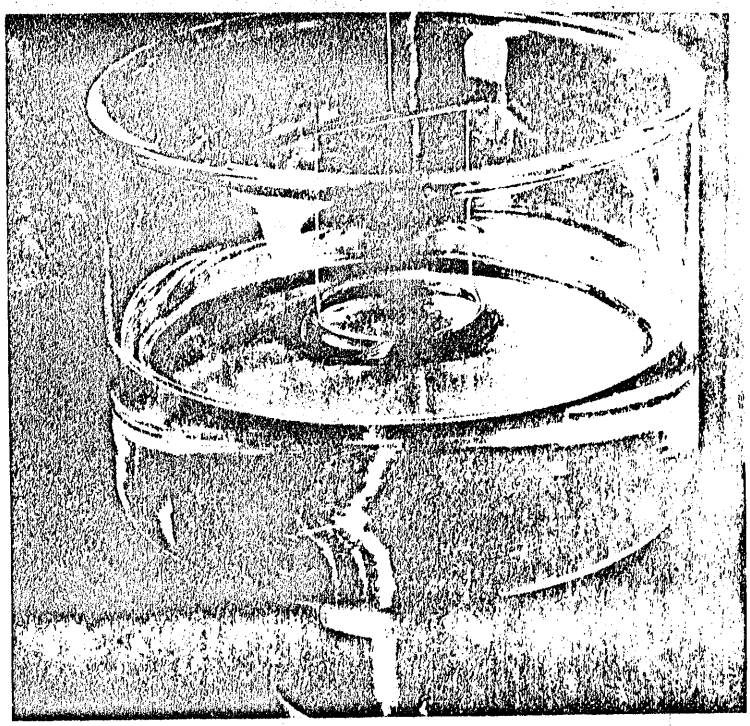

FIGURE 2 - MEASURING SURFACE TENSION

Measuring Surface Tension (see Figure 2):

The cleaned platinum-iridium ring should first be attached to the hook at the end of the lever arm. The arrest mechanism should be holding the arm at this time.

The liquid to be measured is transferred to the clean glass vessel and placed on the sample table. The sample table is moved around until it is directly beneath the platinum-iridium ring. Raise the sample table until the ring is immersed in the test liquid. The ring should be in the liquid, beneath the surface so that the entire ring will be wetted. About 1/8 inch immersion is generally considered sufficient.

The torsion arm is now released and the instrument adjusted to a zero reading. Adjust the knob on the right side of the case until the index and its image are exactly in line with the reference mark on the mirror. Be careful to keep the ring in the liquid during this manipulation, raising or lowering the sample table if necessary be means of the knob adjustment underneath the table. Now turn the knob beneath the main dial on the front of the case until the vernier reads zero on the outer scale of the dial.

Lower the sample table until the ring is in the surface of the liquid, adjusting the knob on the right side of the case to keep the index lined up with the reference mark on the mirror. The surface of the liquid will become distended, but the index must be kept on the reference. Continue the two simultaneous adjustments until the distended film at the surface of the liquid breaks. The scale reading at the breaking point of the distended film is the apparent surface tension.

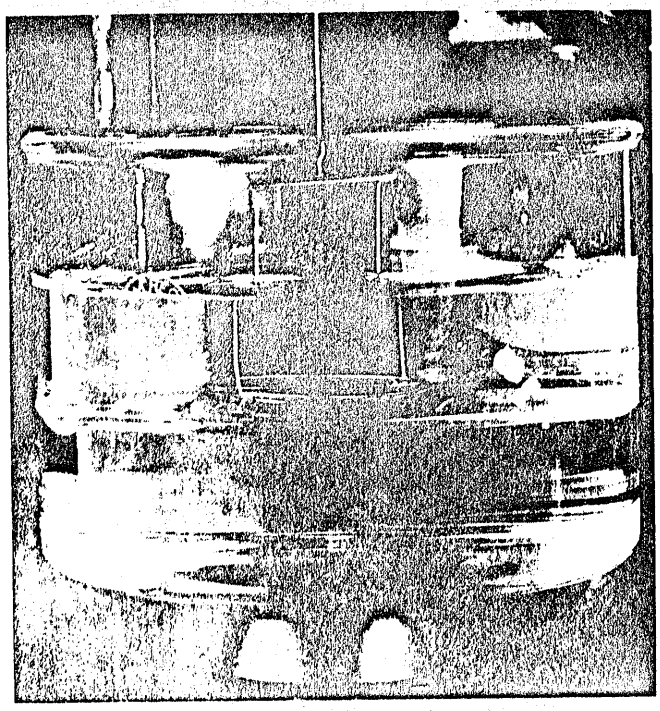

FIGURE 3 - MEASURING INTERFACIAL TENSION

Measuring Interfacial Tension (see Figure 3):

INTERFACIAL TENSION FROM MORE DENSE LIQUID TO LESS DENSE LIQUID is made by exerting an upward force on the ring. Procedure is very similar to surface tension measurements; and cleanliness of ring and sample container is, of course, essential.

The more dense liquid is transferred to the clean glass vessel and placed on the sample table, and the table moved beneath the platinum-iridium ring. The sample table is raised until the ring is immersed about 1/8 inch and wetted by the heavier liquid. The torsion arm is now released and the instrument adjusted to a zero reading. Adjust the knob on the right side of the case until the index and its image are exactly in line with the reference mark on the mirror. Be careful to keep the ring

in the liquid during this manipulation by raising or lowering the sample table (if necessary) by means of the knob adjustment beneath the table. Turn the knob beneath the main dial on the front of the case until the vernier reads zero on the outer scale of the dial.

Pour the lighter liquid onto the surface of the heavier liquid to a depth of about 1/4 to 1/2 inch, depending on the two liquids. The layer of lighter liquid should be deep enough so that the ring will not enter the upper surface of the lighter liquid before the interface film ruptures.

Before proceeding with the actual measurement, it may be advisable to allow the interface to age or stabilize for a time. For example, ASTM D-971 prescribes an aging period of 30 seconds for an interface between oil and water.

Lower the sample table until the ring is in the interface between the two liquids, adjusting the knob on the right side of the case to keep the index lined up with the reference mark on the mirror. The interface between the two liquids will become distended, but the index must be kept on the reference. Continue the two simultaneous adjustments until the distended film at the interface ruptures. The scale reading at the breaking point of the interfacial film is the apparent interfacial tension.

INTERFACIAL TENSION FROM LESS DENSE LIQUID TO MORE DENSE LIQUID is made by exerting a downward force on the ring. The ring used on the Surface Tensiometer is weighted, and in effect exerts its own force, the effective downward force being increased by decreasing the upward force from the torsion wire as exerted through the lever arm. The procedure differs only slightly from that employed in the previously described measurement of interfacial tension; and the cleanliness of the ring and sample container is, of course, essential.

The more dense liquid is transferred to the clean glass vessel, to a depth of 1/4 to 1/2 inch, depending on the two liquids. The layer should be deep enough so that the ring will not contact the bottom of the vessel before the interface film ruptures.

The lighter liquid is now poured onto the surface of the heavier liquid already in the vessel, and the vessel on the sample table moved beneath the platinum-iridium ring. The sample table is then raised by the gross adjustment until the ring is immersed in the lighter liquid and wetted by it (about 1/8 inch above the liquid interface). The torsion arm is now released, and the instrument adjusted to a zero reading. Adjust the knob on the right side of the case until the index and its image are exactly in line with the reference mark on the mirror. Be careful to keep the ring in the lighter liquid during this manipulation by

block, check and if necessary adjust the diameter of the new torsion wire as follows:

1. Level the instrument.

2. Cut a small strip of paper and place it on the platinum-iridium ring to form a platform.

3. Place a 1:000 gram weight on the platform.

4. Release the torsion arm.

5. Adjust knob on right side of instrument case until index pointer on arm coincides with reference line on mirror.

6. Turn knob to right of main dial on front of instrument until vernier reads zero on outer scale of dial.

7. Remove 1.000 gram weight from platform.

8. Place a 1.800 gram weight on platform.

9. Adjust knob on right side of instrument case until index pointer on arm coincides with reference line on mirror.

NOTE: The reading obtained should be 65.7 to 66.0. If the reading is higher, the diameter of the torsion wire between the arm and the rear of the instrument must be reduced. Conversely, if the reading is lower, the diameter of the wire between the arm and the front of the instrument must be reduced. In each case, Crocus cloth should be used. The wire must be kept symmetrical and round with uniform diameter along its length.

10. Calibrate instrument as directed on pages 2 and 3 under CALIBRATION.