Traffic Prediction for Inter-Data Center Cross-Stratum Optimization Problems

Michał Aibin, Wrocław University of Science and Technology and British Columbia Institute of Technology
Soroush Haeri, Simon Fraser University
Krzysztof Walkowiak, Wrocław University of Science and Technology
Ljiljana Trajković, Simon Fraser University

Agenda

Motivation

Problem Formulation

Algorithms

Results

Conclusion

Agenda

Motivation

Problem Formulation

Algorithms

Results

Conclusion

Motivation

- Growing popularity of content-oriented services is a significant trend observed recently in communication networks.
- Annual global IP traffic will reach 3.3 ZB per year by 2021

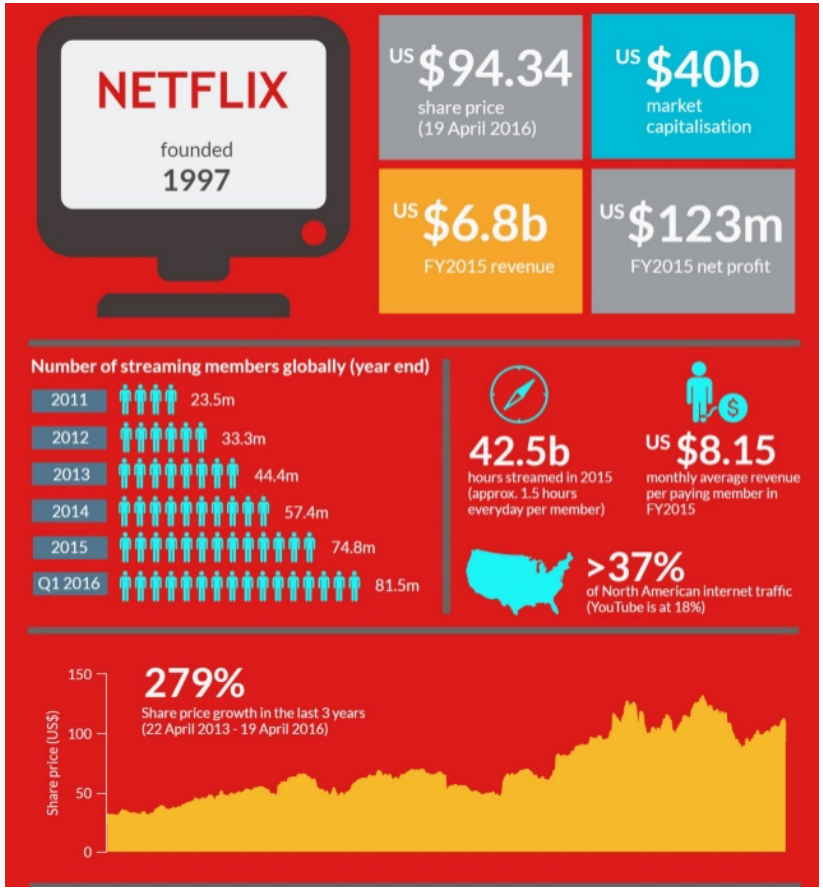

Motivation

- Worldwide public cloud services market revenue is projected to grow 18.5% in 2017 reaching $260.2B, up from $219.6B in 2016.
- Infrastructure as a Service (IaaS) is projected to grow 36.6% in 2018 alone

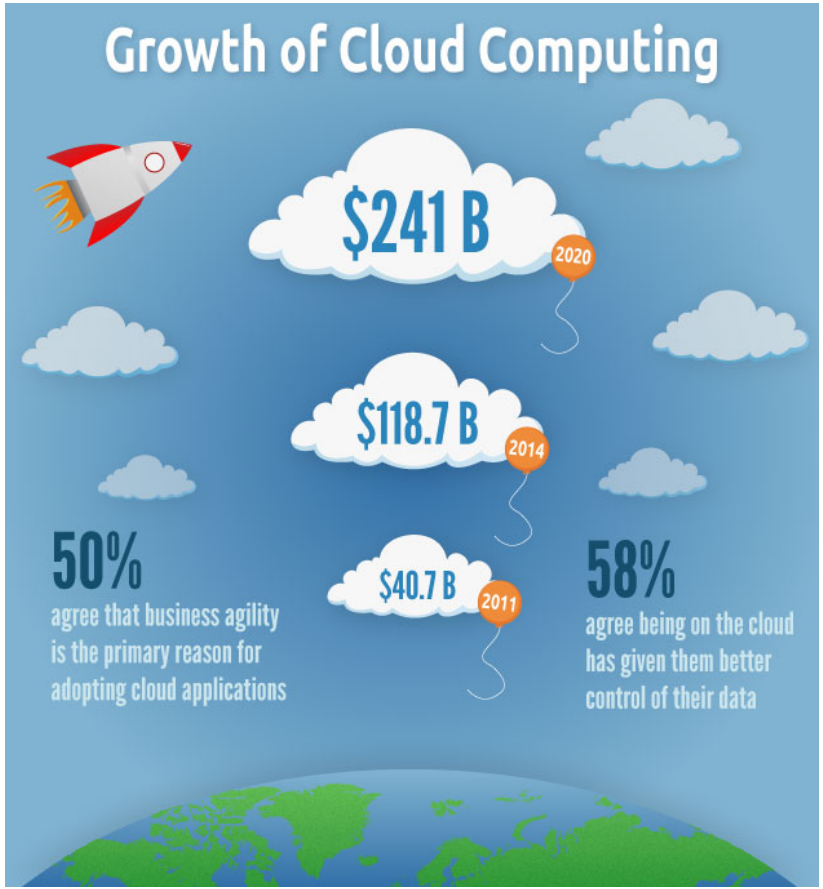

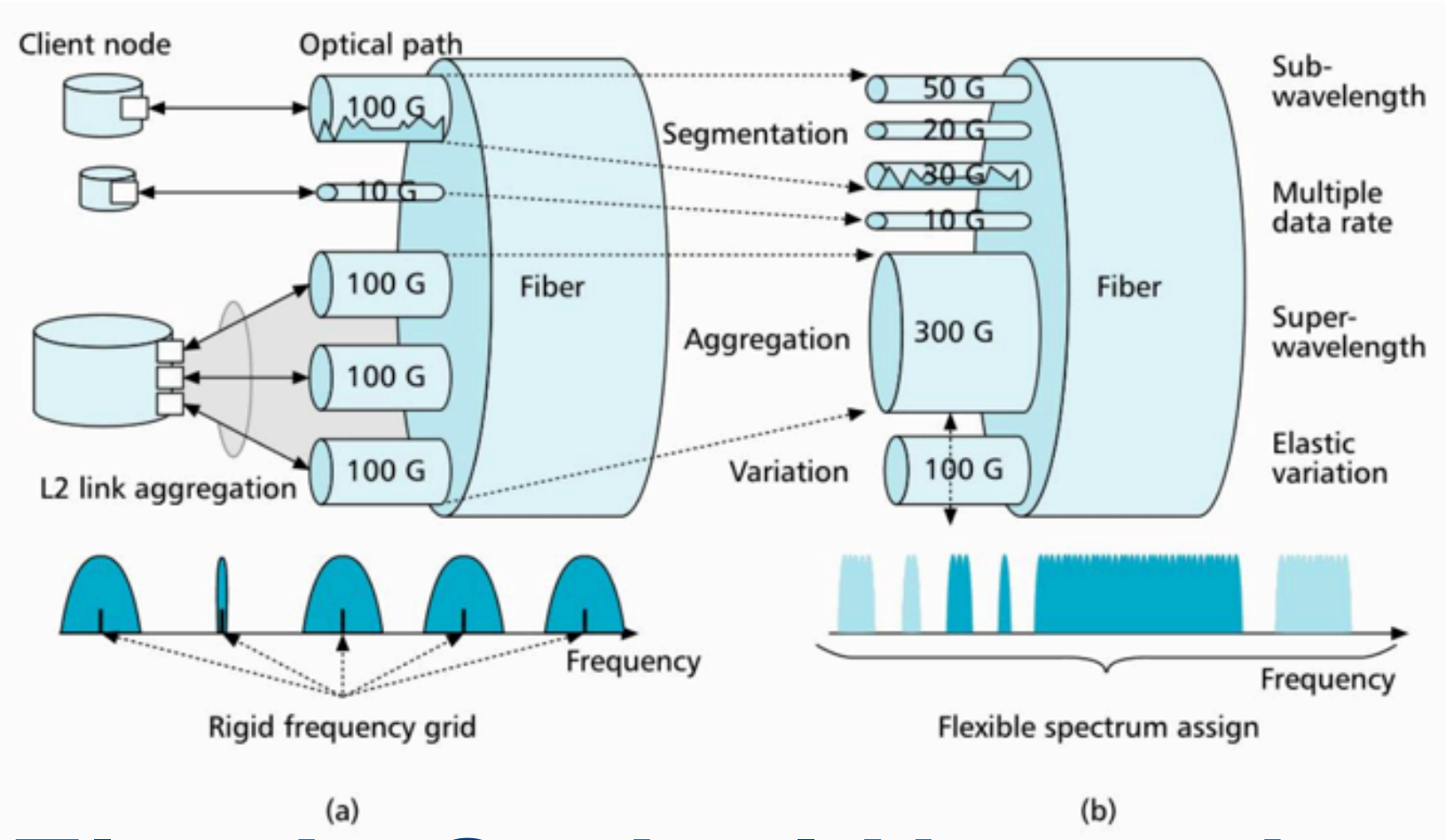

Elastic Optical Networks

Agenda

Motivation

Problem Formulation

Algorithms

Results

Conclusion

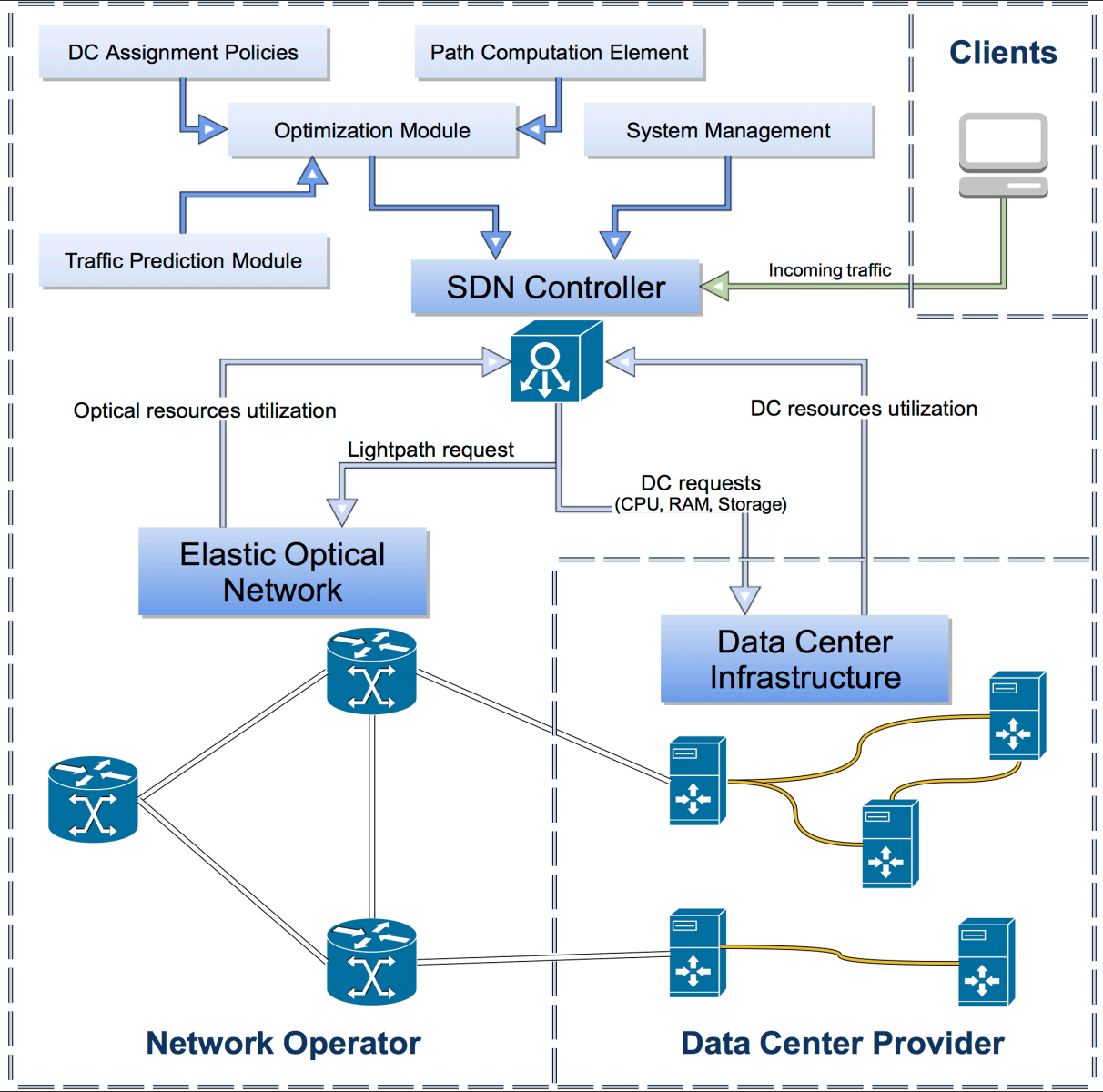
DC Assignment Policies
Path Computation Element
Clients
Optimization Module
System Management
Traffic Prediction Module
SDN Controller
Incoming traffic
Optical resources utilization
DC resources utilization
Lightpath request
DC requests
(CPU, RAM, Storage)
Elastic Optical Network
Data Center Infrastructure
Network Operator
Data Center Provider

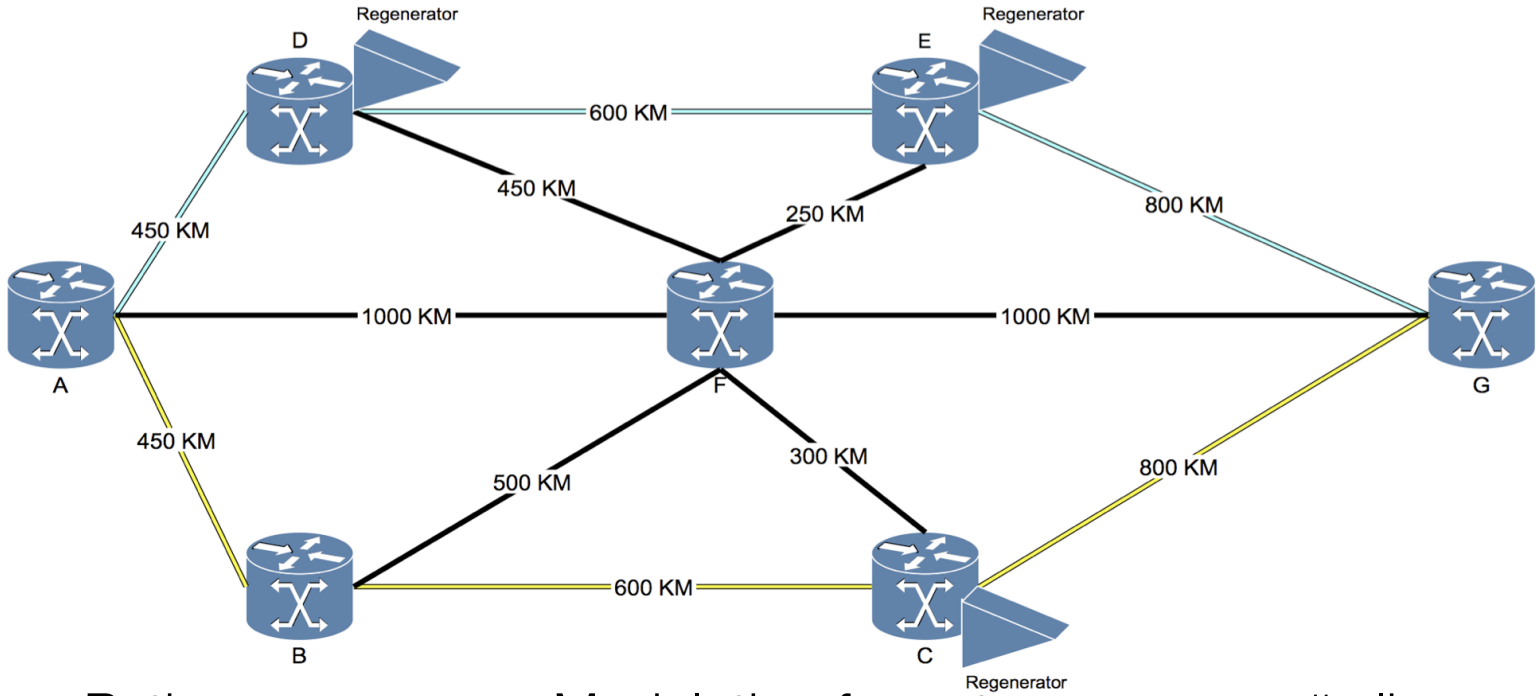

Path	Modulation format	# slice
A-B-C-G [1850]	QPSK (A-C), 8-QAM (C-G)	50
A-B-F-C-G [2050]	BPSK (A-C), 8-QAM (C-G)	116
A-F-G [2000]	Not possible to allocate	-
A-D-F-E-G [1950]	32-QAM (A-D), 16-QAM (D-E), 8-QAM (E-G)	44
A-D-E-G [1850]	32-QAM (A-D), 16-QAM (D-E), 8-QAM (E-G)	34
A-F-C-G [2100]	BPSK (A-C), 8-QAM (C-G)	82

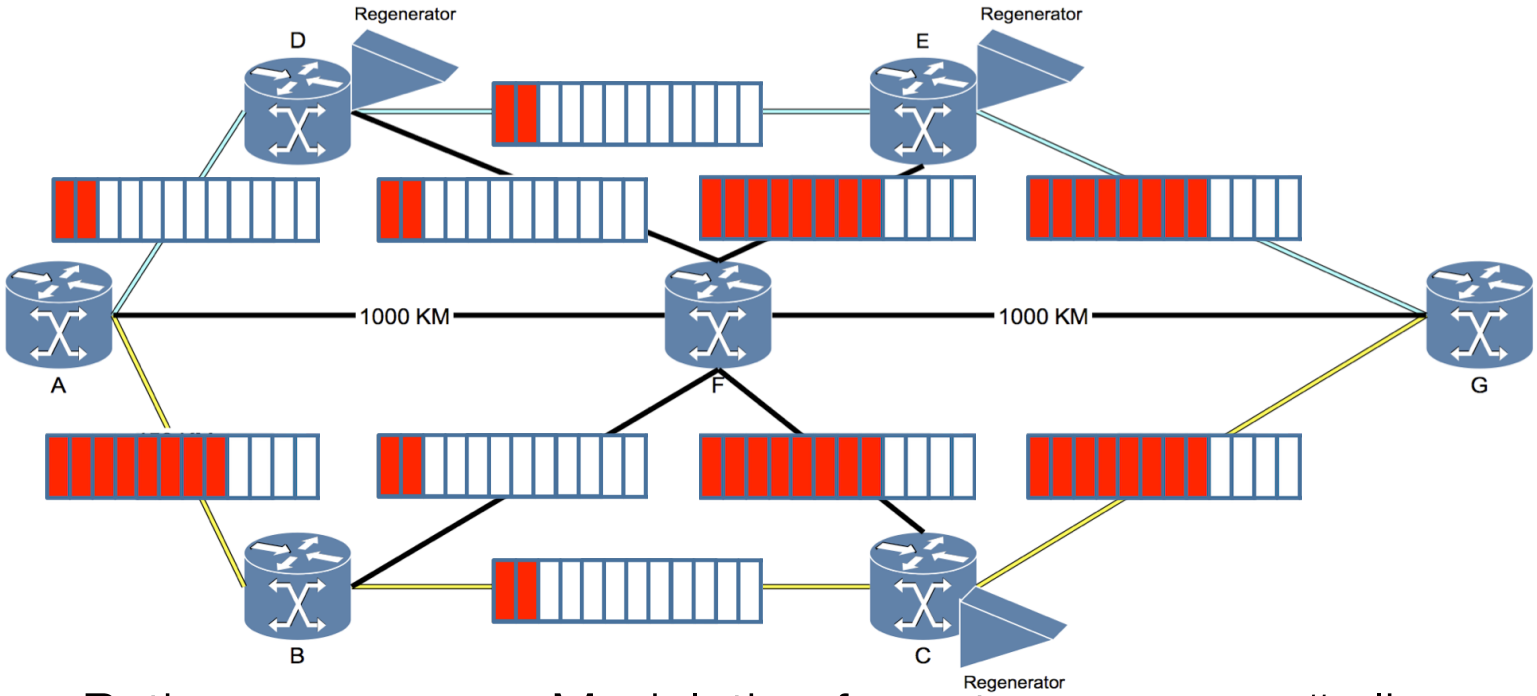

Path	Modulation format	# slice
A-B-C-G [1850]	QPSK (A-C), 8-QAM (C-G)	50
A-B-F-C-G [2050]	BPSK (A-C), 8-QAM (C-G)	116
A-F-G [2000]	Not possible to allocate	-
A-D-F-E-G [1950]	32-QAM (A-D), 16-QAM (D-E), 8-QAM (E-G)	44
A-D-E-G [1850]	32-QAM (A-D), 16-QAM (D-E), 8-QAM (E-G)	34
A-F-C-G [2100]	BPSK (A-C), 8-QAM (C-G)	82

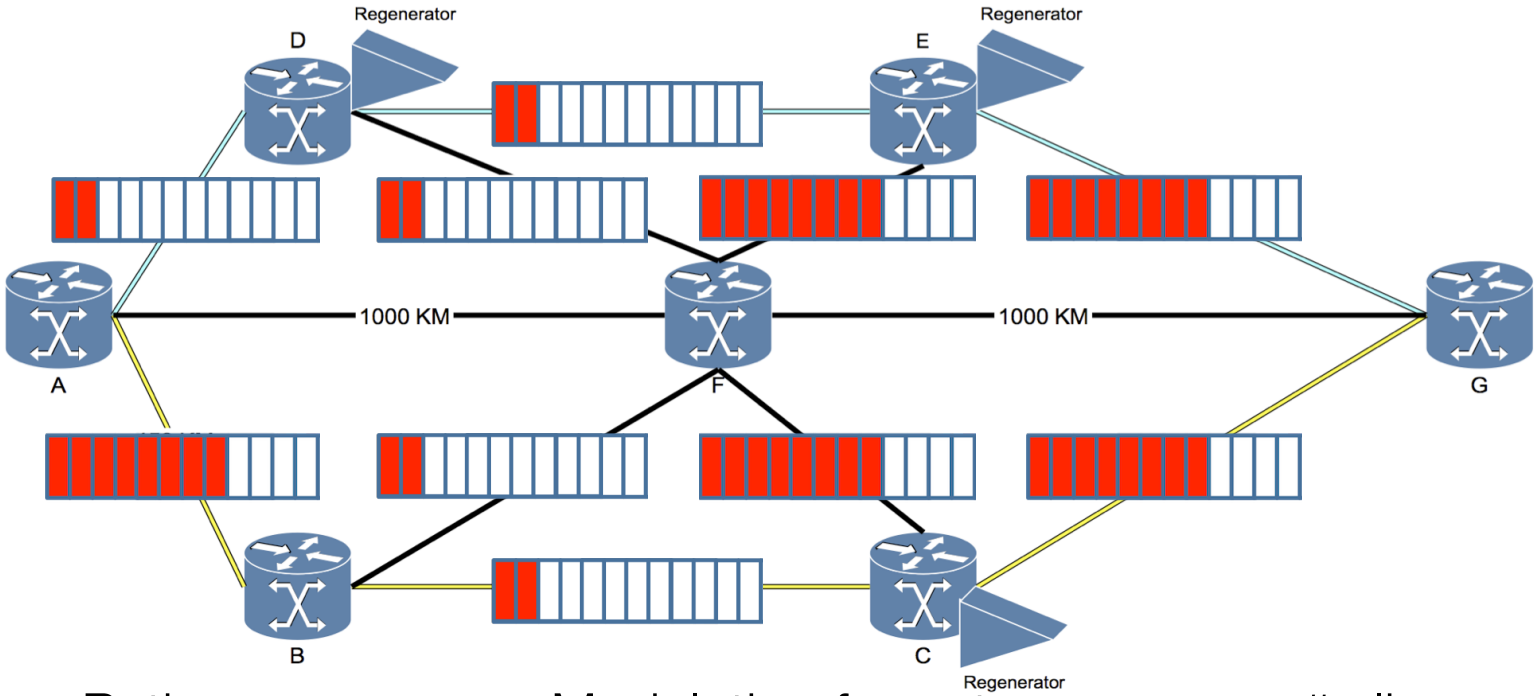

Path	Modulation format	# slice
A-B-C-G [1850]	QPSK (A-C), 8-QAM (C-G)	50
A-B-F-C-G [2050]	BPSK (A-C), 8-QAM (C-G)	116
A-F-G [2000]	Not possible to allocate	-
A-D-F-E-G [1950]	32-QAM (A-D), 16-QAM (D-E), 8-QAM (E-G)	44
A-D-E-G [1850]	32-QAM (A-D), 16-QAM (D-E), 8-QAM (E-G)	34
A-F-C-G [2100]	BPSK (A-C), 8-QAM (C-G)	82

Agenda

Motivation

Problem Formulation

Algorithms

Results

Conclusion

Single strata optimization

- Nearest
- Least Utilized
- Cheapest

Cross-stratum optimization

- Hybrid
- Traffic Prediction
  (based on the Monte Carlo Tree Search)

Single strata optimization

- While implementing these approaches is rather simple, preliminary simulation results showed that they do not scale well and, hence, result in high (≥ 1%) blocking percentage of requests even in networks with low to moderate traffic loads

Cross-stratum optimization - Hybrid algorithm

- We consider DC utilization and cost of service in Data Center strata
- The optical layer utilization of candidate paths from the request source to DCs is considered in optical strata
- We calculate a preference score for every (DC, candidate path) pair
- The DC and the path with the highest score are then selected for service provisioning.

Cross-stratum optimization - Traffic Prediction

- At the beginning, the MCTS has a tree that consists only of the root node
- A search tree is first constructed where the root corresponds to the current DC and the resource utilization in the network. Since requests arrive in batches, we build a decision tree for each request from a batch
- Monte Carlo simulations are executed using the current distribution of the DC requests to deepen the search tree up to 5 levels, thus 5 x |S(D)| search trees, where |S(D)| is the length of the currently processed requests batch
- The decision trees are build in a parallel, we obtain calculated pairs of DC and candidate paths for each request in the batch

Agenda

Motivation

Problem Formulation

Algorithms

Results

Conclusion

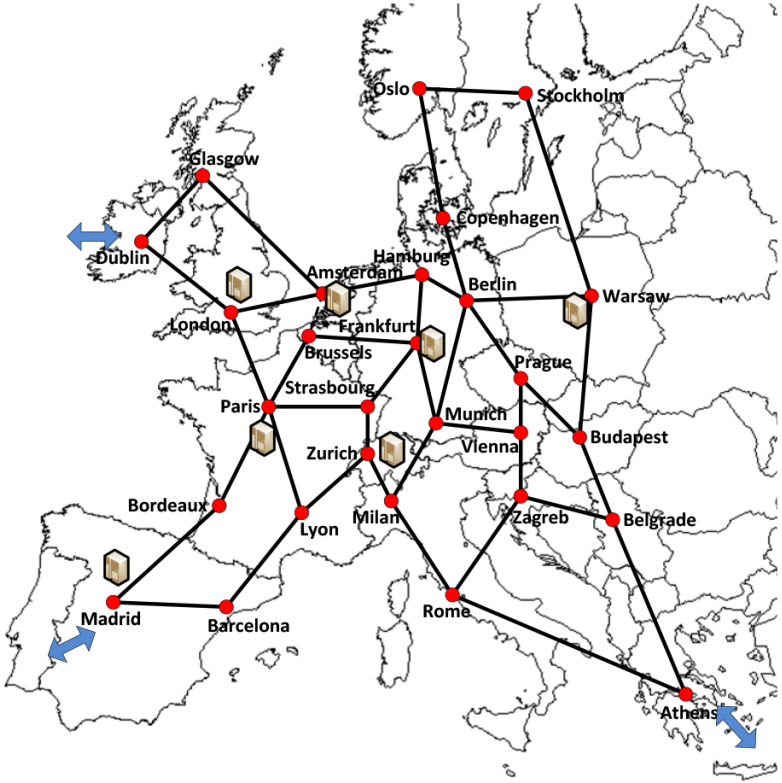

Networks used in the simulations

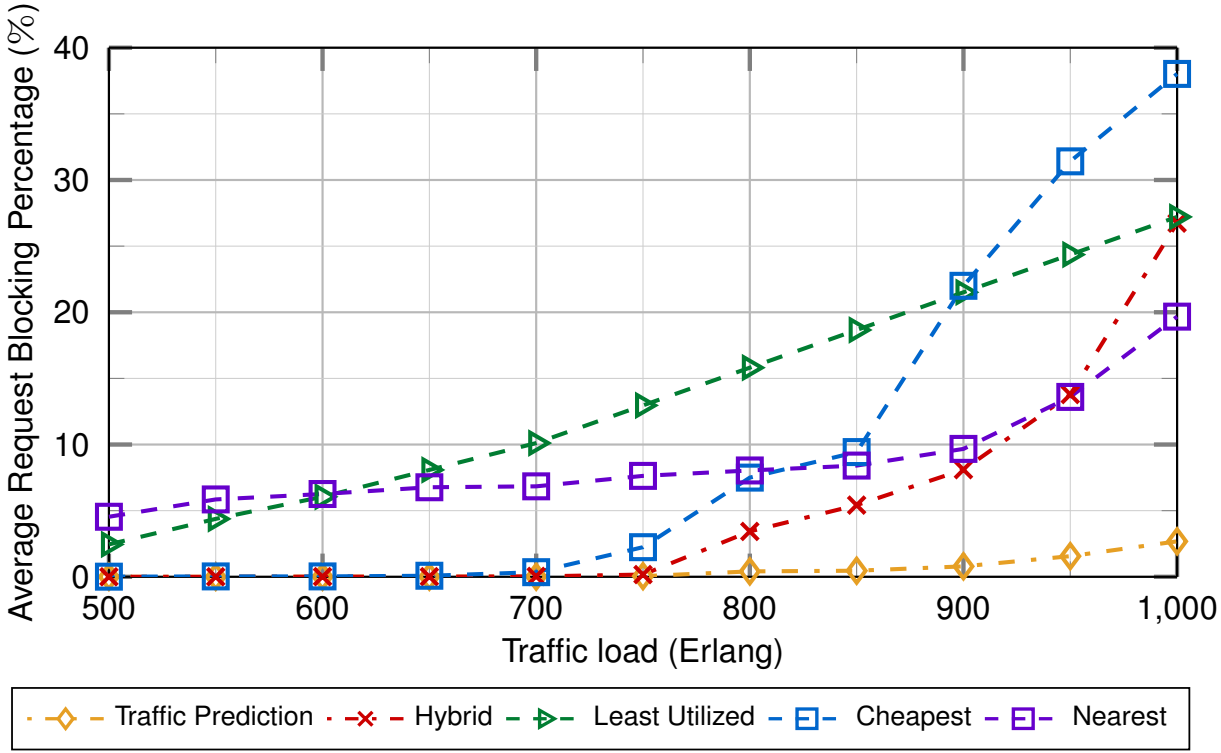

Euro28 network

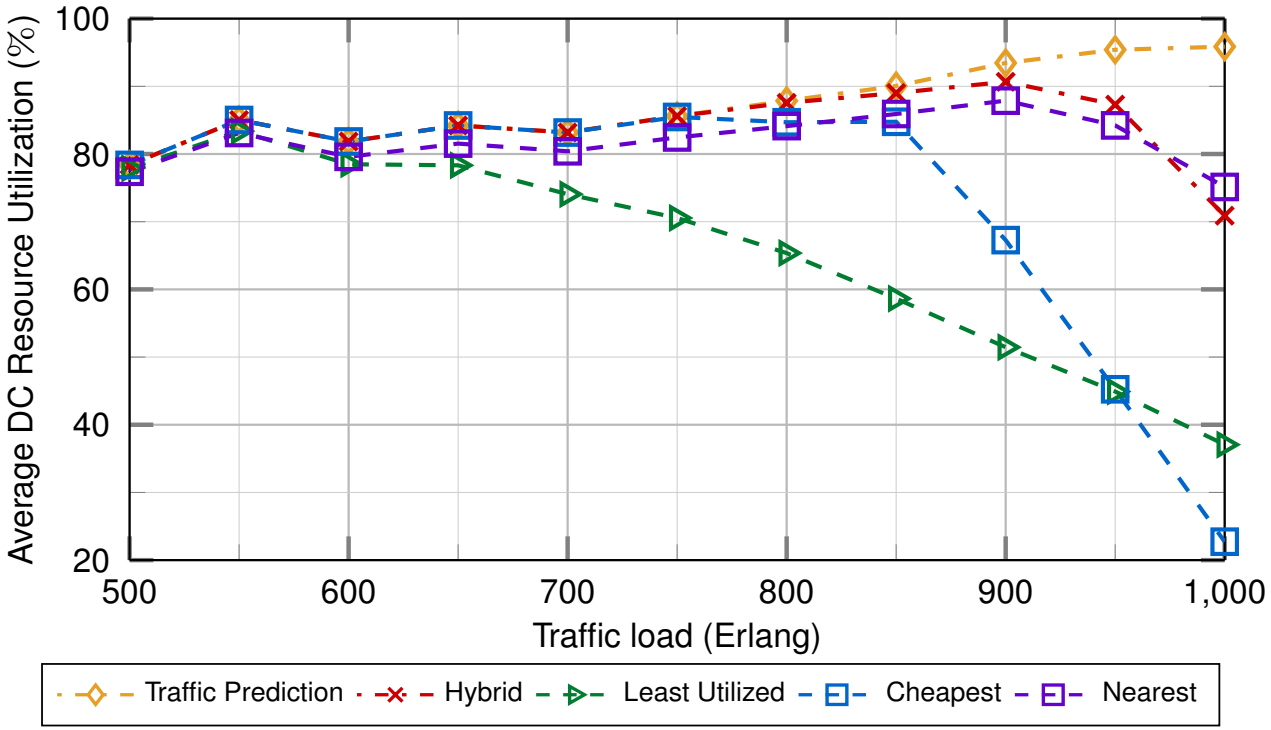

Euro28 network

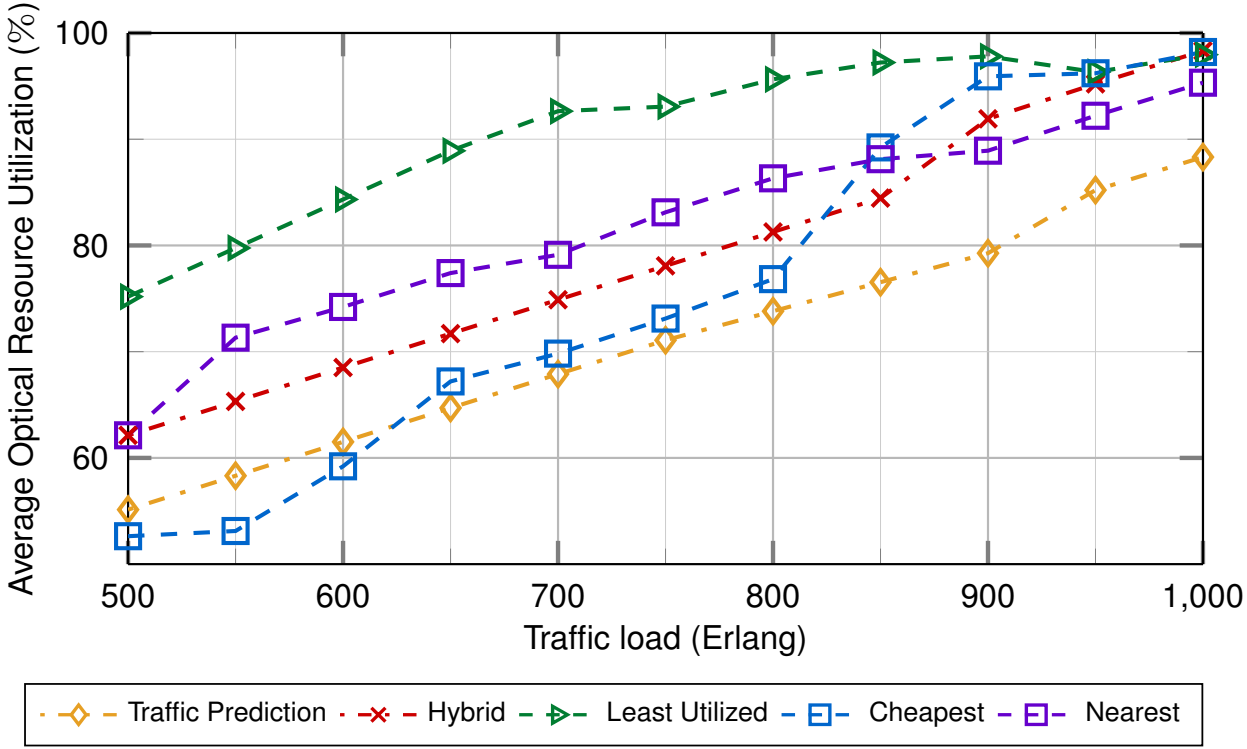

Euro28 network

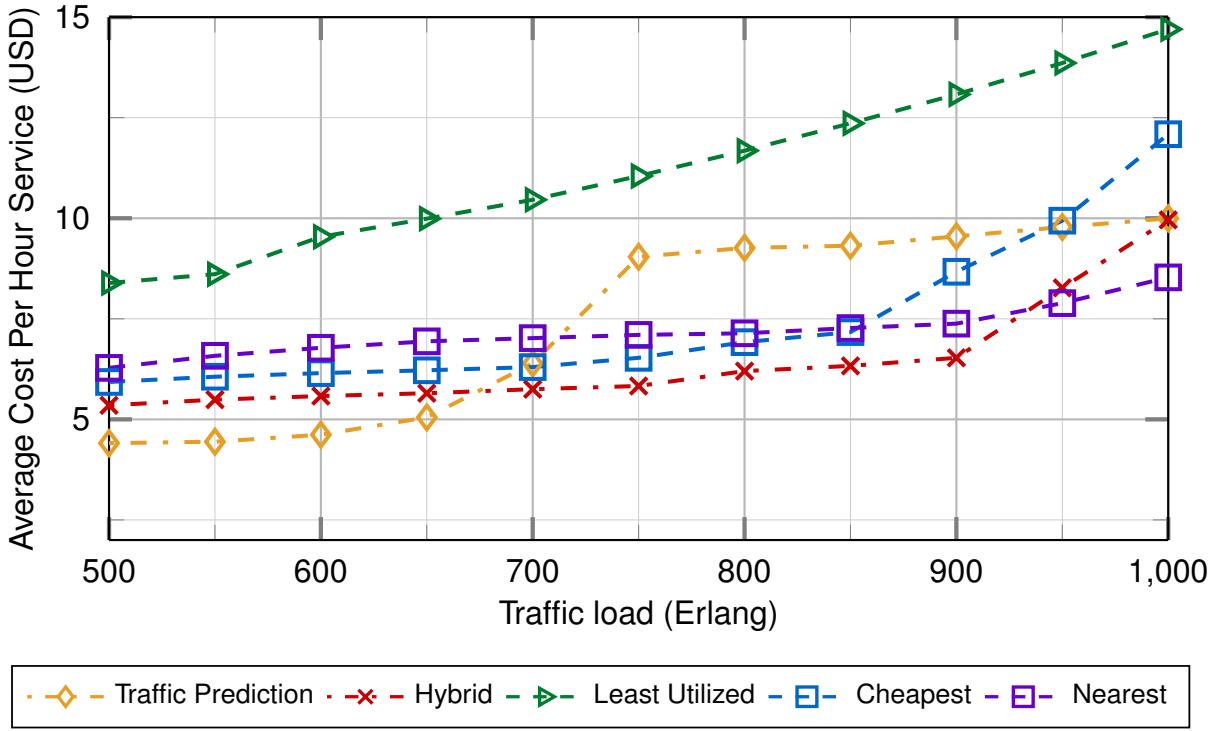

Euro28 network

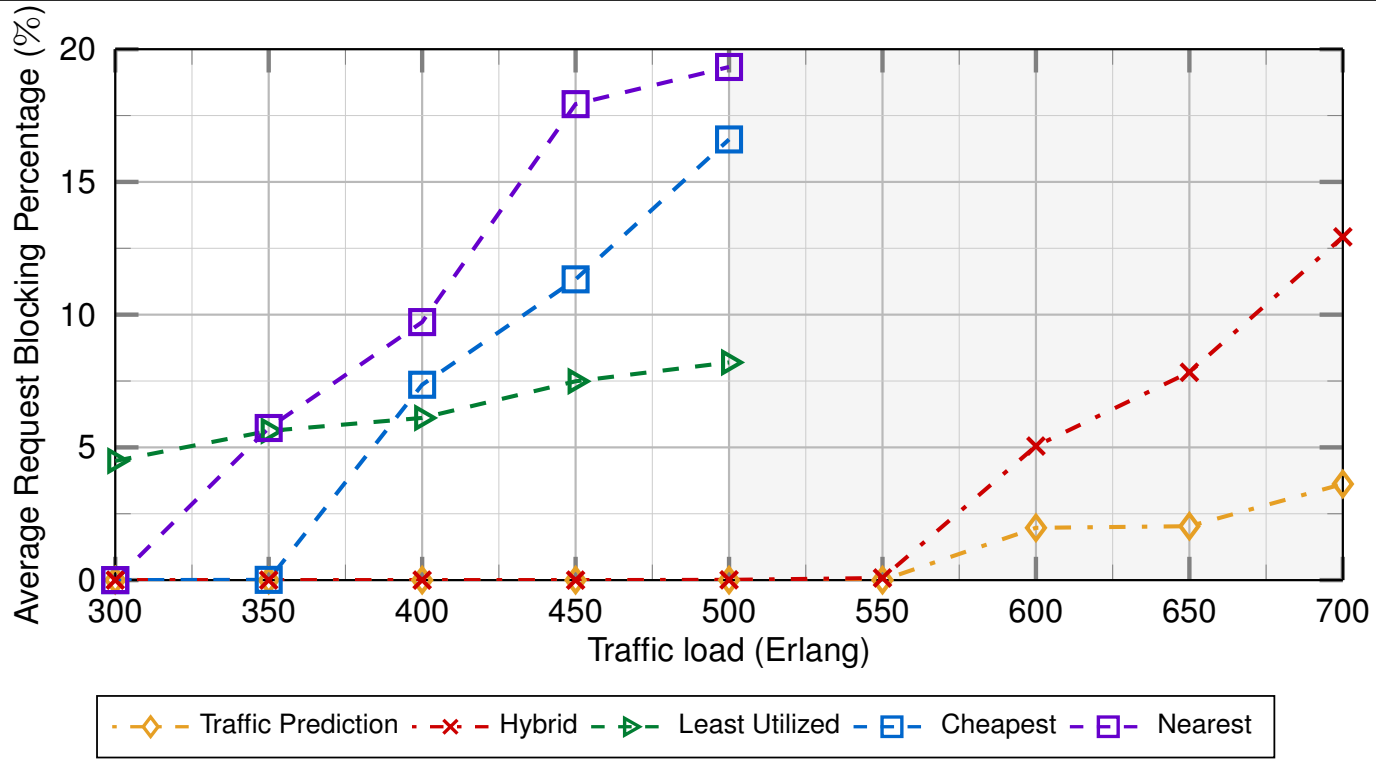

US26 network

Agenda

Motivation

Problem Formulation

Algorithms

Results

Conclusion

Conclusion

- Cross-stratum optimization algorithms were able to better coordinate resource allocation in both strata thus improving network performance
- The cost for using Monte Carlo Tree Search is slightly higher than the other approaches
- The Traffic Prediction approach, albeit delivering a more costly solution, resulted in low request blocking percentage and more efficient utilization network resources

QUESTIONS & ANSWERS

THANK YOU